37-220.2 (5-26)
Allegion NL B.V. - Energiestraat 2 - 3903 AV Veenendaal - Nederland - info.axa.home@allegion.com - axahomesecurity.com



AXA HOME/SECURITY

EN

AXA Remote 2.0

Remote-controlled window opener

2014/30/EU

CE

Information

You have just acquired a high quality AXA product.
The instructions below must be followed closely in order to effectively assemble and operate this product.

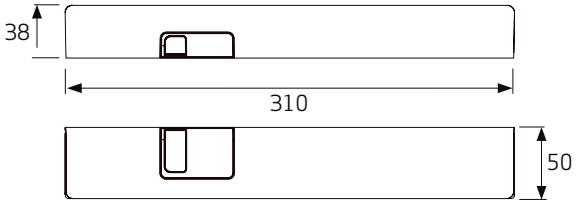

Application
Top and side-hung windows, opening outwards

Screw thickness	Pre-drilling softwood	Pre-drilling hardwood
3,5 mm	Ø 2,0 mm	Ø 2,5 mm
4,0 mm	Ø 2,5 mm	Ø 3,0 mm

Installation tools (recommended)
Tape measure, (cordless) drill, screwdriver, Ø 2 mm drill bit, pencil or bradawl, screw hook and allen key

Mounting position

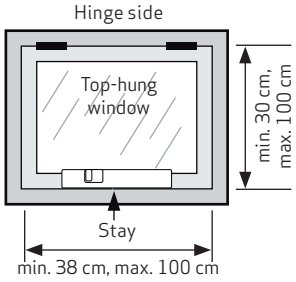

Minimum required assembly space:

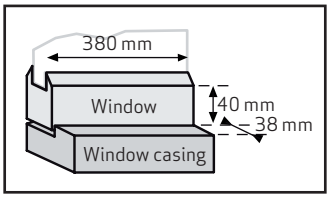

Minimum window height: 30 cm.
Maximum range remote control: distance 10 m.

Package contents
1. (2x) AAA Batteries
2. (4x) AA Batteries
3. (1x) Closing unit
4. (1x) Window casing plate
5. (1x) Drilling template
6. (1x) Cover
7. (1x) Window plate
8. (1x) Screw hook
9. (2x) Screws 3.5 x 30 mm
10. (9x) Screws 4.0 x 40 mm
11. (1x) Allen key
12. ((1x) Remote control

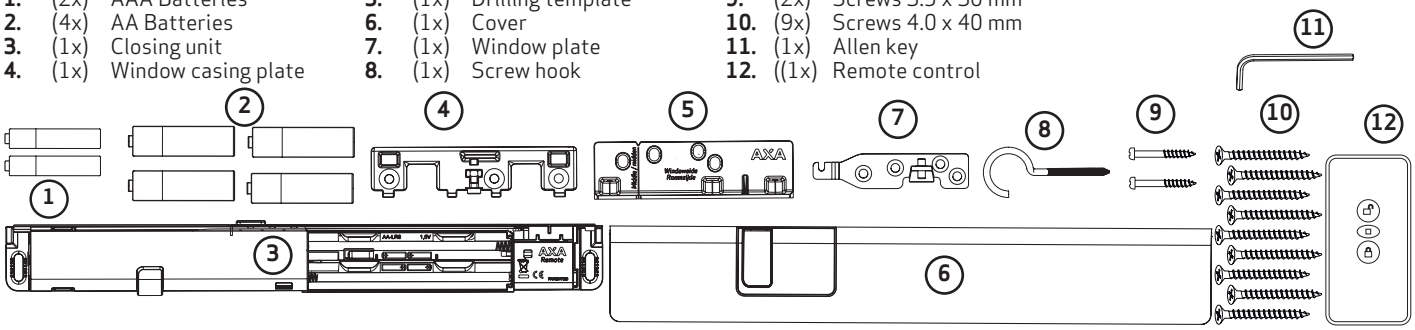

User manual

Remote control (figure **A**)**:**
The remote control has 3 buttons: Open, Stop and Close.
When the Open or Close buttons are pressed briefly, the window will fully open or close.
When the Open or Close buttons are pressed continuously, the window will open or close as long as the button is pressed.
When the Stop button is pressed, the movement will be stopped.
Always point the remote control at the front of the closing unit ③ (figure **B**).

Configuring remote control:
1 Place 2x AAA batteries ① in the remote control ⑫ and 4x AA batteries ② in the closing unit (figure **C**).
2 The LED light in the closing unit will come on for 20 seconds (green). Press within these 20 seconds the Open button (top button) on the remote control. The light will briefly turn off when configuration has taken place.

A

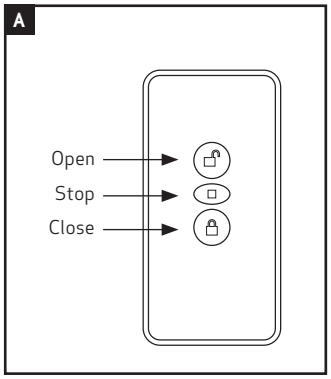

B

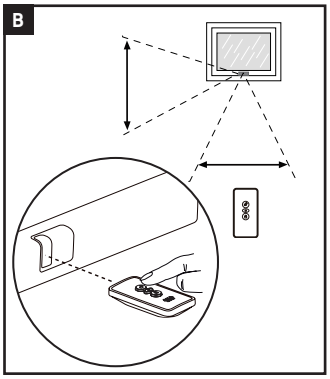

C

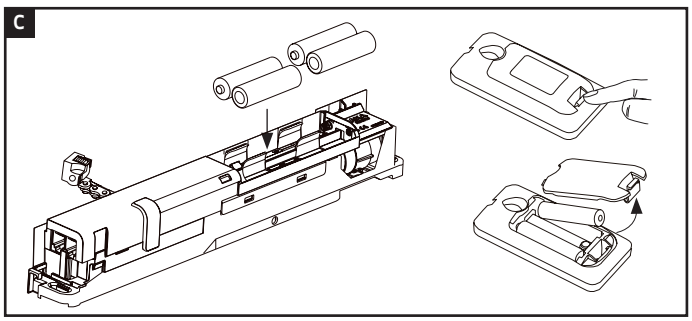

37-220.2 (5-26)



AXA HOME/SECURITY

EN

AXA Remote 2.0

Remote-controlled window opener

SKG® POLITIE KEURMERK VEILIG WONEN

2014/30/EU

CE

The configuration time is 20 seconds. The LED light will switch off once this time passes. If you want to configure the remote control or another remote control, you must briefly remove the batteries and then re-insert them. Then repeat step 2.

- ***A remote control can be configured to an unlimited number of window units.***
- ***A window unit can be configured to maximum 8 remote controls.***

3 Press the Open button again and allow the chain to fully exit the closing unit.
The closing unit is now ready for assembly (figure **D**).

Installation manual

4 Check whether the window closes effortlessly.
5 Mark the middle of the window on the window casing.
6 Place the drilling template, ⑤ with the centre of the V sign on the marked central point, firmly against the window and window casing (figure **E**). Mark the hole (figure **F**) and screw the screw hook ⑧ into the window through the opening of the drill template (pre-drill Ø 2 mm). Use this screw hook to properly close the window; ensure the drilling template is firmly against the window and window casing (figure **G**). Mark 2 assembly points through the drilling template (figure **H**).
Pre-drill the assembly points (Ø 2 mm).
7 Fix the drilling template in place using the screws ⑨ (3.5 x 30 mm).
8 Drill the 7 holes (figure **I**) using a Ø 2 mm drill bit.
9 Remove the drilling template

Assembly

10 Mount the window plate ⑦ (using pre-drilled holes) with 4 screws ⑩ (4.0 x 40 mm *, figure **J**).

When using a wireless drill, you must make the last few tightening revolutions by hand

11 Mount the window casing plate ④ (using pre-drilled holes) with 3 4.0 x 40 mm screws (figure **J**).
12 Slide the closing unit on to the window casing plate; keep the window slightly open when doing so (figure **L**).
13 Slide the chain block fully over the window plate (figure **M**). The block will fix itself in place.

** For pinewood: Use 4 x 4.5 x 45 mm screws*

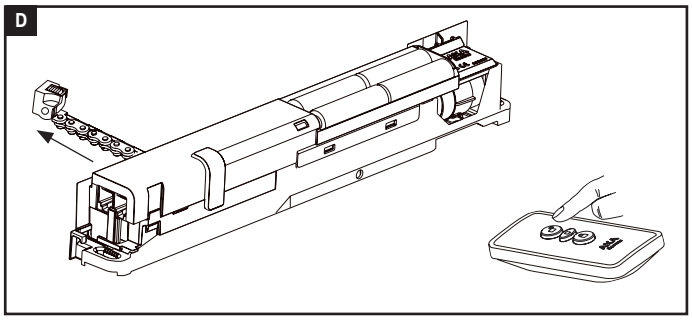

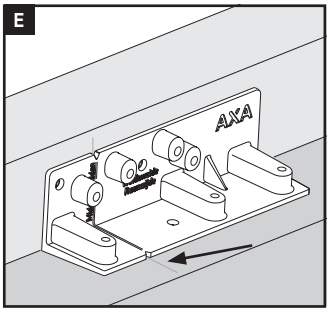

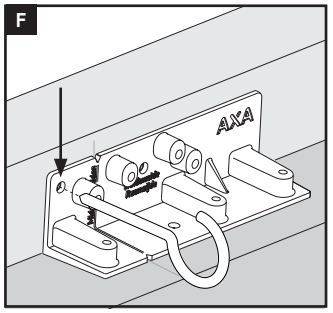

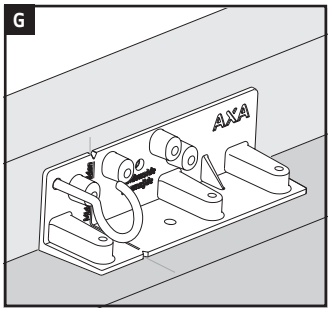

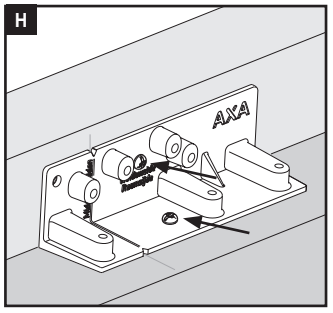

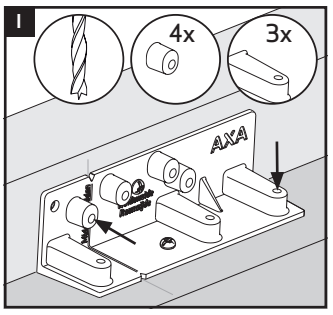

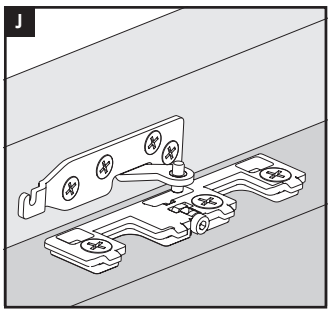

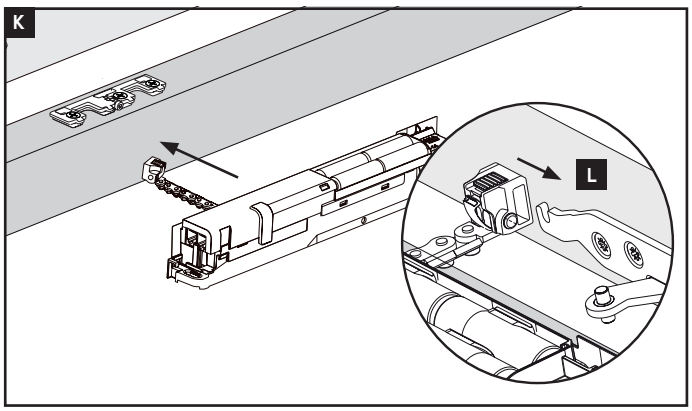



AXA HOME/SECURITY

EN

AXA Remote 2.0

Remote-controlled window opener

SKG® POLITIE KEURMERK VEILIG WONEN

2014/30/EU

CE

14 Close the window with the remote control (figure **M**).

When doing so, hold the closing unit and ensure it stays the same distance from the window.

Configure closing unit:

15 The closing unit will stop flashing once it is fully closed. You can adjust the close-position using the adjustment screw.

If the window does not close completely to normal position:

If the window is not close enough (the window moves or a draft comes through the window), you must turn the adjustment screw to the right (figure **N**).
For effective operation and a long battery life-span, we advise not to configure the closing unit too tightly.

If the closing unit does not lock completely:

If the closing unit does not close properly, the LED light will flash. In this case, the unit is too tight.
If the closing unit has been configured too tightly, you must turn the adjustment screw to the left (figure **O**). Press the close button on the remote control once again and check whether the closing unit closes properly. Repeat this process until the unit closes properly.

Final assembly

16 Screw the closing unit in place using the 2 screws (10) (4.0 x 40 mm, pre-drill Ø 2 mm), one on the left-hand side and one on the right-hand side of the unit (figure **P**). When screwing in place, ensure that the closing unit is at an equal distance from the window casing.

17 Once again, check whether the window opens and closes properly by fully closing and opening the window once. Repeat step 15 if the window does not open or close properly.

Assembly cover:

18 Slide the cover (6) on to the closing unit, from front to back, until it goes no further (figure **Q**).

19 The AXA Remote 2.0 is ready for use.

Assembly adapter version:

20 Assemble the window unit in the same way as the battery version (step 1 to/incl. 19). Remove the batteries before connecting the adapter to the closing unit and the power supply (figure **R**).

21 Decide whether you want the adapter wire to exit the left-hand side or right-hand side of the closing unit (depen ding on the location of the power socket).
Use cutters to cut a small snippet from the cover, in the semi-perforated area (figure **R**).

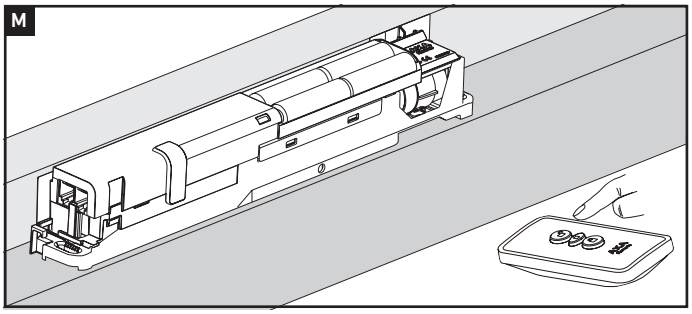

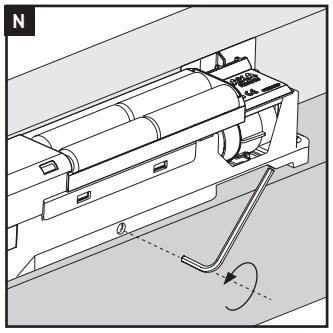

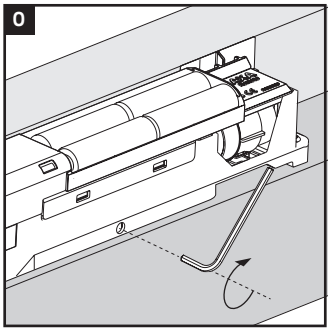

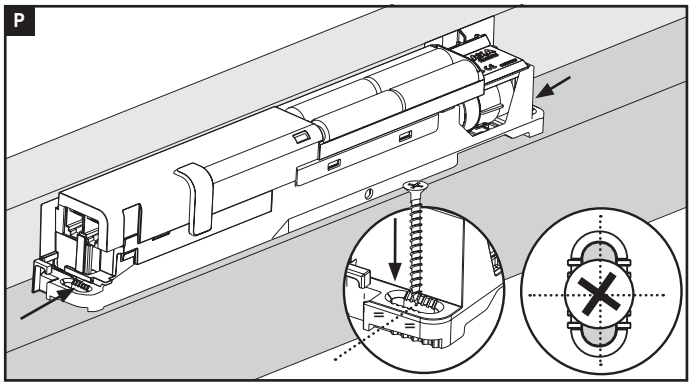

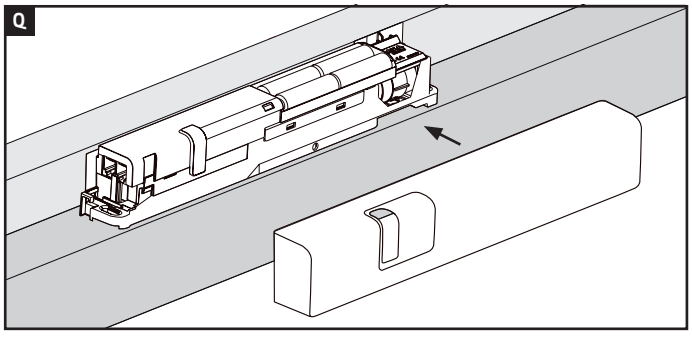

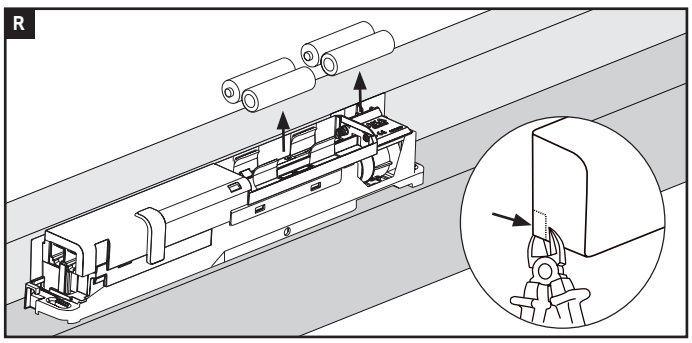



AXA HOME/SECURITY

EN

AXA Remote 2.0

Remote-controlled window opener

SKG® POLITIE KEURMERK VEILIG WONEN

2014/30/EU

CE

22 Click the adapter wire into the closing unit:
- lead the wire from the left-hand side of the closing unit and place the adapter in the power socket.

or:
- lead the wire through the opening on the right-hand side of the closing unit and under the designated hook (figure **S**). Place the adapter into the power socket.

Ensure that the wire is placed neatly along the window casing.

The adapter with 5m wire can be ordered as an accessory under item number 2902-31-98.

NB. The AXA Remote is only intended for items with a residential or office purpose.

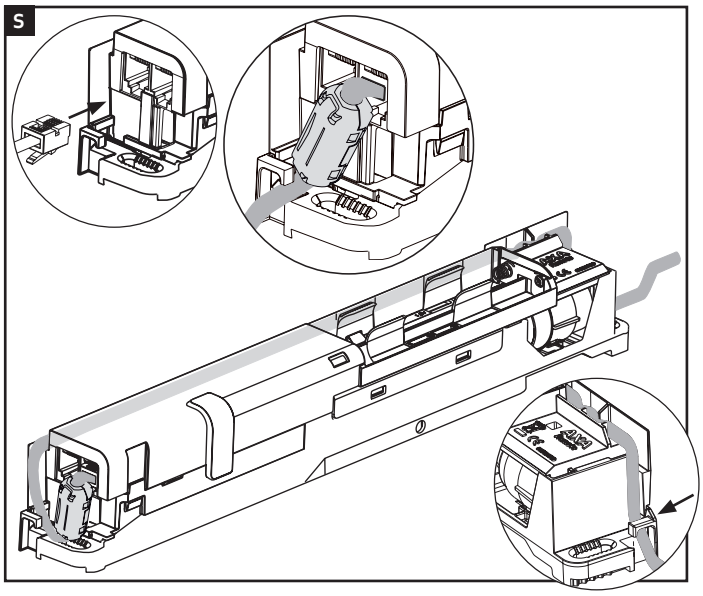

Troubleshooting

The window does not close
- Disconnect the chain from the window and check that the window does not become stuck and operates without problems.
- Check that installation steps have been followed correctly.
- The batteries may be flat (have insufficient power). Replace the batteries in the unit and/or remote control (figure **C**).
- The unit has been configured too tightly. The closing unit may (for example, the expansion and contraction of the window causes by temperature variances) if it has been configured too tightly. Remove the 2 outer screws (figure **P**) from the closing unit. Turn the adjustment screw fully to the right (figure **O**). Repeat step 14 to/incl. 17. Mount the 2 outer screws on to the window unit once again.

The unit does not react or reacts insufficiently
- Temporarily remove the batteries or remove the adapter plug from the power socket and wait 2 minutes. Press a button on the remote control as if you are about to use the unit. Replace the batteries or the adapter. Now try to use the unit by pressing one of the buttons on the remote control.

Unit does not immediately respond to the remote control, sleep mode
- To save energy, the unit switches to sleep mode after a certain period of time; that is why you sometimes need to press twice on the remote control to activate the unit.
- Environmental factors could have an impact on the range of the remote control. Full sun, TL lighting very close to the front of the unit or a dusty/moist environment could reduce the operating range. In this case, you must move closer to the closing unit to operate it.
- The batteries may be flat (have insufficient power). Replace the batteries in the unit and/or remote control.

Replace batteries
Low-battery indicator
- If the LED starts to flash red/green intermittently, this means the batteries need to be replaced very soon. The AXA-Remote will always ensure that the last remaining power in the batteries is used to close the window.
- Open the cap of the unit and remove the 4 flat batteries. Insert 4 new batteries (AA) as identified in this assembly manual (figure **C**).

Only use good alkaline AA batteries (do not use rechargeable batteries)

Configure multiple units with the same remote control
- Briefly remove the batteries from the to-be-configured window unit or briefly remove the adapter from the power socket and wait 2 minutes. Replace the batteries or the adapter. Continue to configure the remote control so long as the LED light remains green (20 seconds) (see figure **C**).

Ventilation capacity
According to NEN 1087 and NEN 8087, which identify minimum ventilation per area, the AXA Remote 2.0 complies with the minimum ventilation capacity of 25 m^3/hour per area, based on a window surface area of 0.26 m^2. Due to its many opening possibilities, the AXA Remote 2.0 is also suitable for aeration. For the mentioned window size, each AXA Remote 2.0 is able to sufficiently ventilate an area of 22.5 m^2. The AXA Remote 2.0 also complies with the capacity guideline established in NPR 1088, because it enables continuous opening and closing. This allows the required ventilation to be arranged.